CHAUVIN ARNOUX
PYROCONTROLE

SENSORS CATALOGUE

TEMPERATURE MEASUREMENT IN INDUSTRIAL ENVIRONMENTS

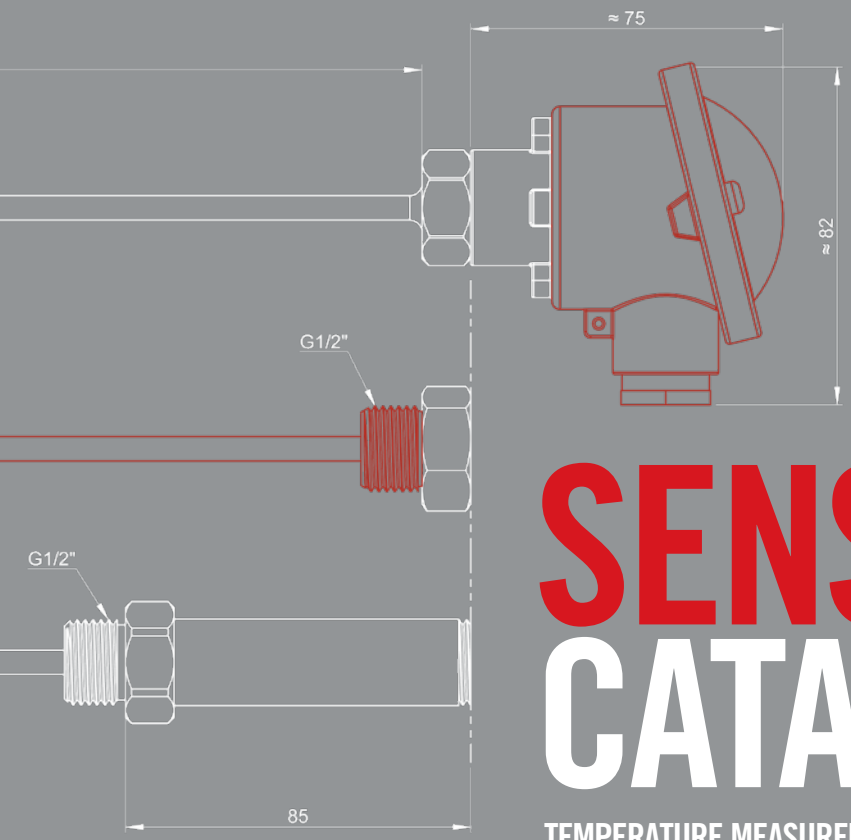

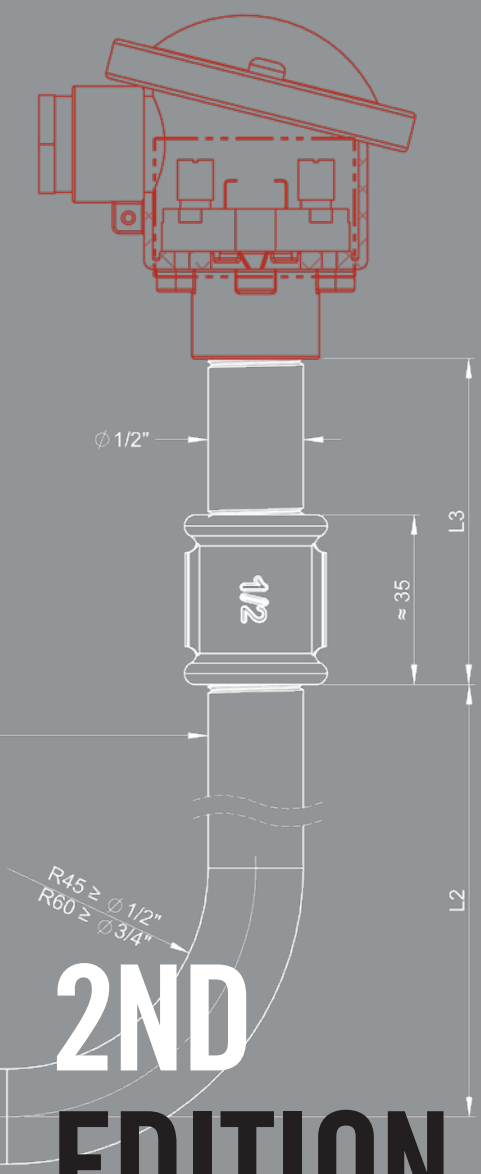

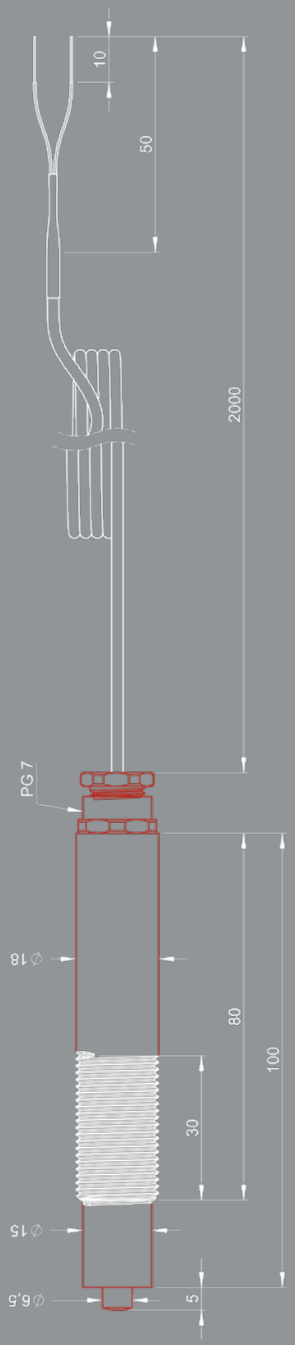

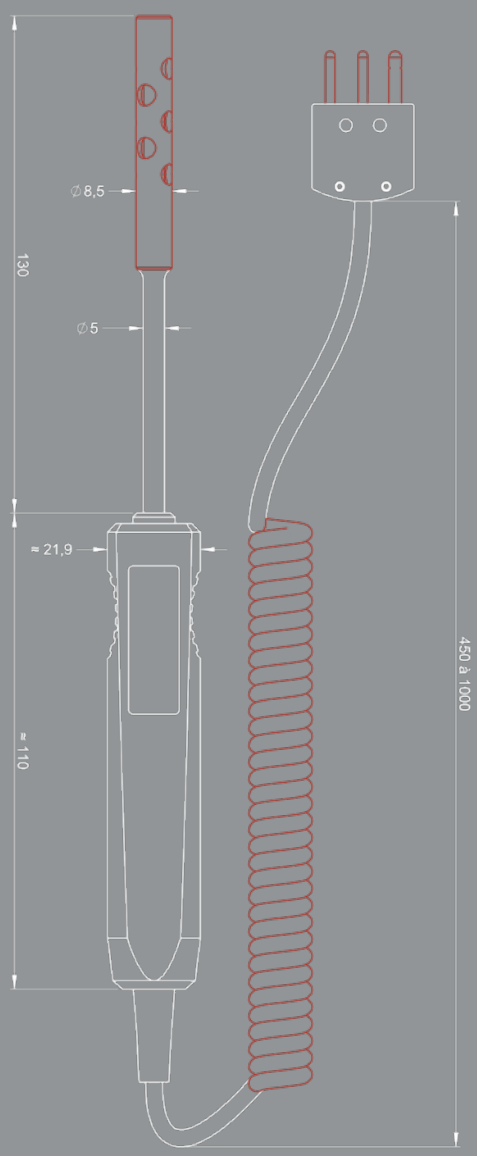

2ND EDITION

Measure up

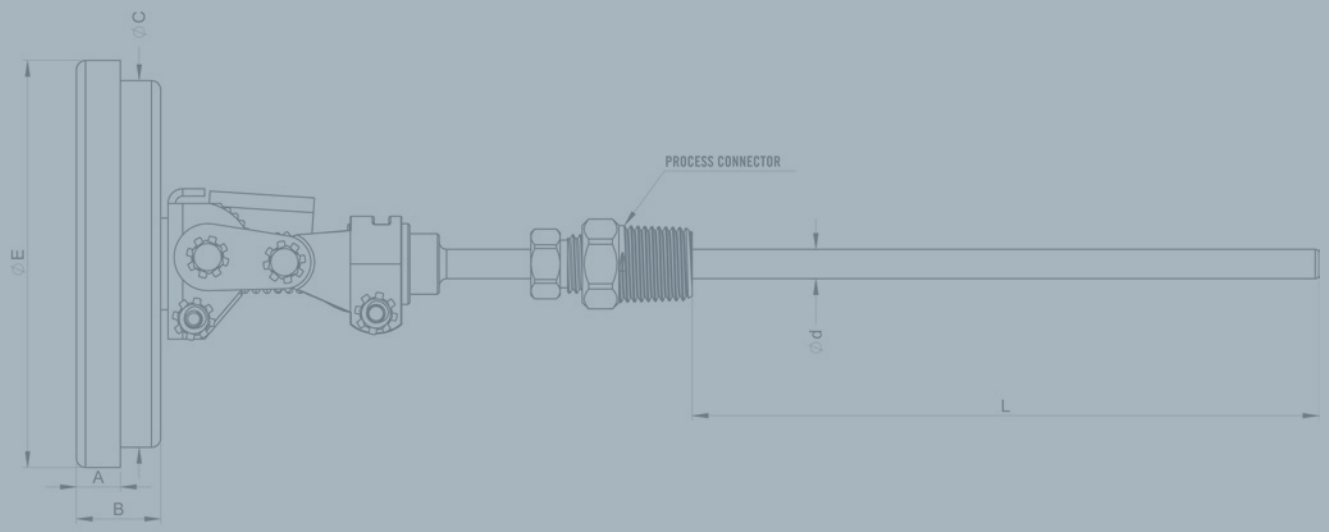

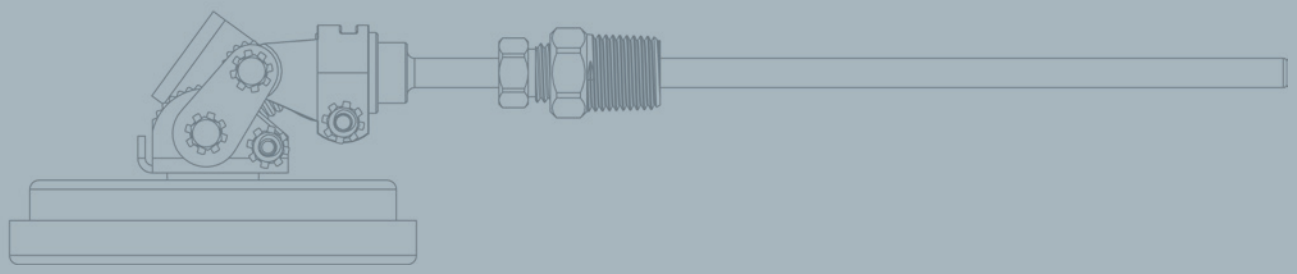

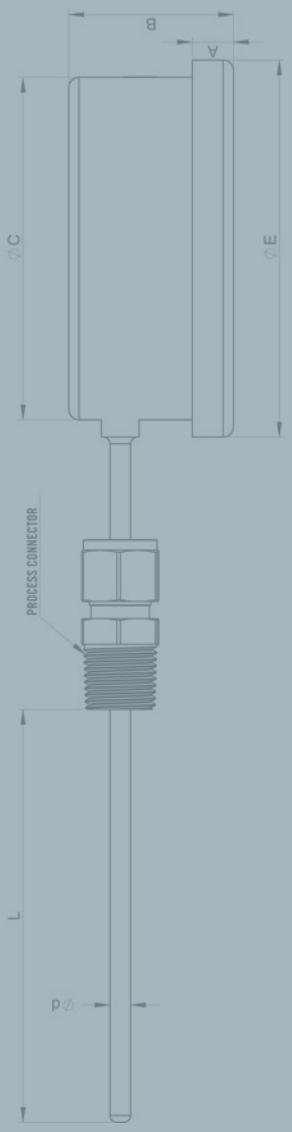

BIMETALLIC THERMOMETERS

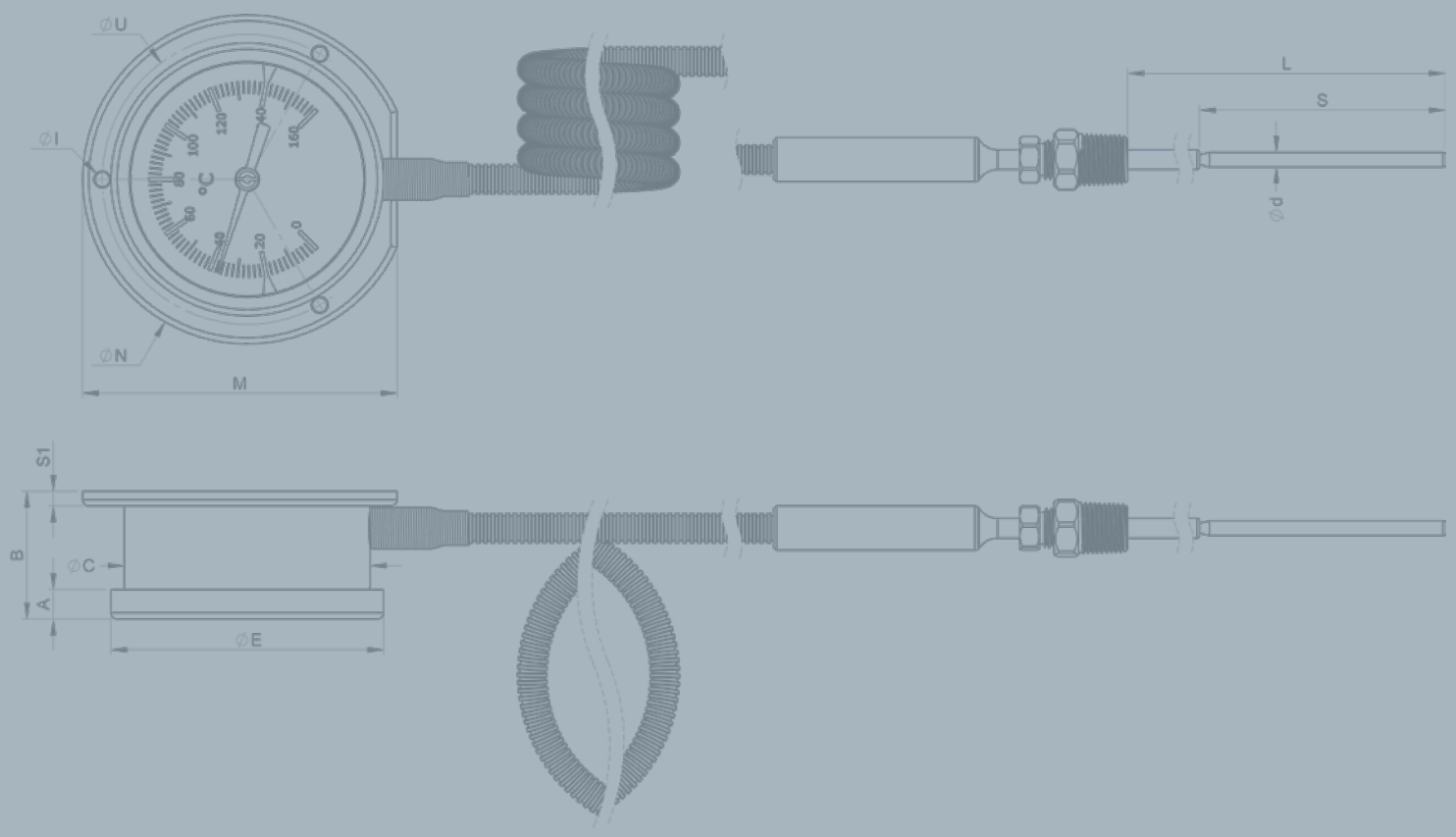

BIMETALLIC THERMOMETER WITH FIXED DIAL 326

TBM1 326

BIMETALLIC THERMOMETER WITH MULTIDIRECTIONAL DIAL 330

TBM2 330

GAS EXPANSION THERMOMETER 334

TDG1 334

TBM1
WITH FIXED DIAL

IMMERSED UP TO 1500 MM | DIAL DIAMETER 50 TO 150 MM | IP 67 | CLASS 1

DESCRIPTION

ATEX bimetallic thermometer, with adjustable zero available as an option. For corrosive liquids and gases in the agri-food industry, pharmacy, chemicals, petrochemicals and the nuclear sector.

SPECIFICATIONS

Accuracy class		Class 1 (CL 1.0)
Ambient temperature		-20...+60 °C
Storage temperature		-50...+70 °C
Scale overrun		110 % of full scale (E.m.)
Plunger PN		25 bar (without thermowell)
Weld seams		Arc welding / Argon TIG
Measuring element		Helicoidal bimetallic
Materials	Casing and frame	Stainless steel AISI 304
	Plunger and connector	Stainless steel AISI 316
	Dial	Aluminium, black graduations on white background
	Needle	Aluminium, black coating, adjustable zero
	Window	Glass, SEKURIT glass
	Seals	Neoprene
Process connection		1/2" NPT or BsP / male, 1/2" NPT / female
		1/4" NPT or BsP / male (for plunger Ø ≤ 6.35 mm)
		3/8" BsP / male (for plunger Ø ≤ 10 mm)
		3/4" NPT or BsP / male, 3/4" NPT / female
		m20 x 1.5 / male, m27 x 2 / male
Protection		IP 65, IP 66, IP 67, hermetically sealed

up to 600°C

ATEX OPTION

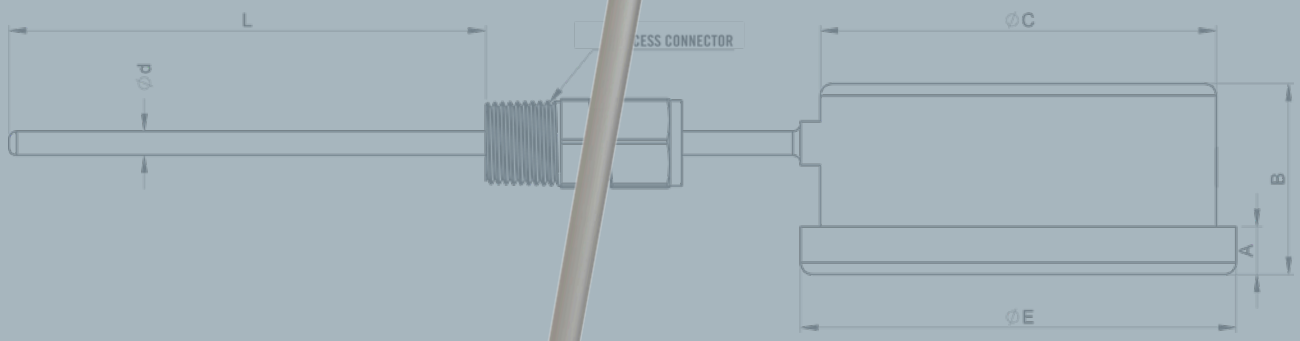

DESIGN YOUR THERMOMETER

CONFIGURATOR CODE

Parameters to be indicated when ordering. Example:

STANDARD MODEL		CASING		RANGE		MOUNTING		IMMERSED Ø		PROT.		IMMERSED LENGTH		PROCESS CONNECTION TYPE		PROCESS CONNECTOR		OPTION OPTIONS
TBM1	-	50	-	EB2	-	1A	-	60	-	P6	-	750	-	RX	-	NM12	-	7
Reference in table and diagram		1		2		3		4		5		6		7		8		9
Possible choice		50 63 80 100 125 150		EA1 / EA2 / EB2 / EB3 ED1 / EE1 / EG1 / EG2 EG3 / EG4 / EG5 / EG6 EG8 / EG9 / EH1 /EH2 EH3 / EH4		1A 2A		60 14 80 95 10 12		P5 P6 P7 HS		50 mm to 1500 mm		RX RG RT		NM12 / BM12 NM14 / BM14 MM20 / BM38 TR15 / NM34 BM34 / NM27 NF12 / NF34		1 / 2 3 / 4 5 / 6 7 / A B / C D

DIAGRAM (MM)

3 1A Direct, lower

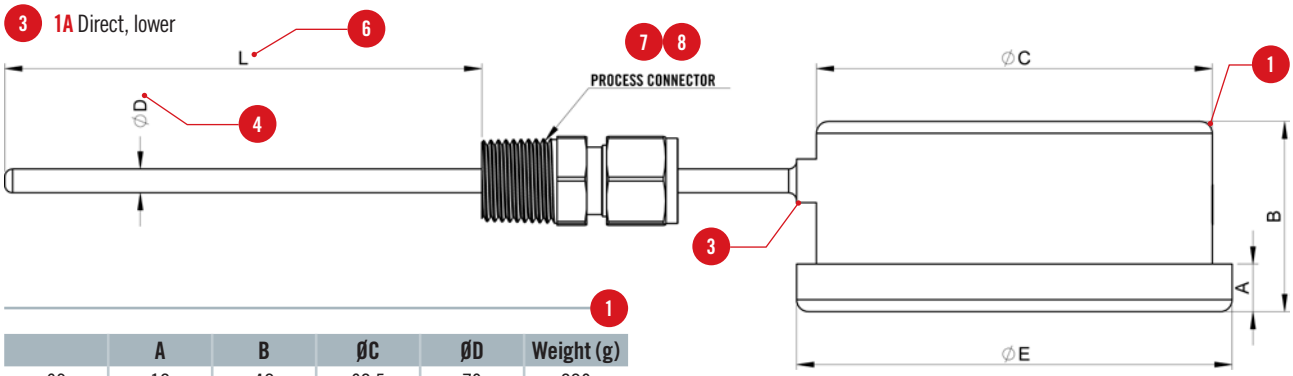

1

	A	B	ØC	ØD	Weight (g)
63	12	48	62.5	70	280
80	9.5	48	80	89.5	350
100	12	48	100	111	500
125	15	48	118.5	129	580
150	15	48	149	161	800

3 2A Centre, rear

1

	A	B	ØC	ØD	Weight (g)
50	6.5	23	51.5	57.5	108
63	10	23	62.5	70	156
80	9.5	23	80	89.5	244
100	12	23	100	111	518
125	15	23	118.5	129	585
150	15	23	149	161	625

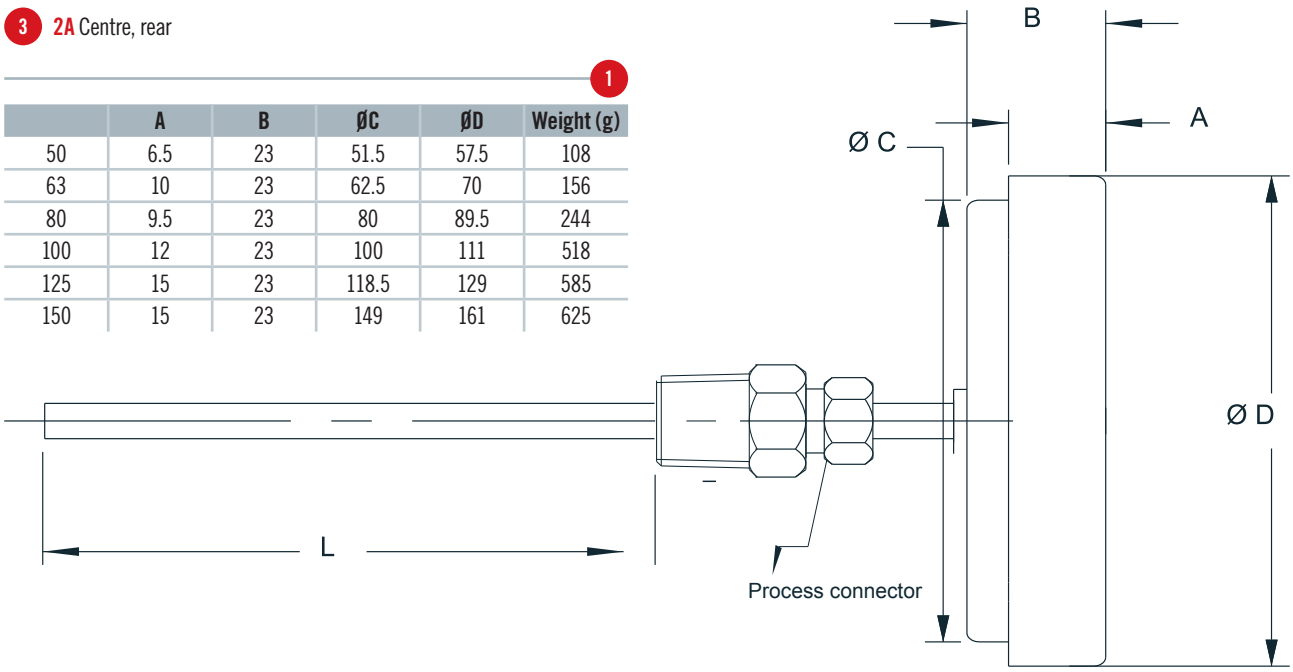

CASING 1

050	50mm / 2"	100	100mm / 4"
063	63mm / 2"1/2	125	125mm / 4"1/2
080	80mm / 3"	150	150mm / 6"

MEASUREMENT RANGE (°C) 2

EA1	-20…+40 °C	EG1	0…+50 °C	EG8	0…+200 °C
EA2	-20…+60 °C	EG2	0…+60 °C	EG9	0…+250 °C
EB2	-30…+70 °C	EG3	0…+80 °C	EH1	0…+300 °C
EB3	-30…+120 °C	EG4	0…+100 °C	EH2	0…+400 °C
ED1	-50…+100 °C	EG5	0…+120 °C	EH3	0…+500 °C
EE1	-80…+120 °C	EG6	0…+150 °C	EH4	0…+600 °C

MOUNTING 3

1A	Direct, lower	2A	Centre, rear

IMMERSED DIAMETER 4

60	6.0 mm	95	9.5 mm
14	1/4" (6.35mm)	10	10 mm
80	8.0 mm	12	12 mm

PROTECTION 5

P5	IP65	P7	IP67
P6	IP66	HS	Hermetically sealed

IMMERSED LENGTH 6

xxxx	50 mm to 1500 mm

MIN. IMMERSED LENGTH 6

Immersed diameter	6 mm - 1/4"	8 mm	10 mm	12 mm
Measurement range (°C)	Min. immersed length (mm)			
0…50	130	110	110	110
0…60	110	95	95	95
0…80	95	70	70	70
0…100	75	70	70	70
0…120	70	60	60	60
0…150	60	50	50	50
0…200	50	45	45	45
0…250	40	35	35	35
0…300	60	50	50	50
0…400	50	45	45	45
0…500	45	40	40	40
0…600	40	35	35	35

PROCESS CONNECTION TYPE 7

RX	Fixed	RG	Adjustable	RT	Pivoting / Rotary

PROCESS CONNECTOR 8

NM12	1/2"NPT (M)	MM20	M20*1.5mm (M)	BM34	3.4" BSP (M)
BM12	1/2"BSP(M)	BM38	3/8" BSP (M)	NM27	M27 x 1.5mm (M)
NM14	1/4"NPT(M)	TR15	1.5" Triclover	NF12	/2"NPT (F)
BM14	1/4"BSP (M)	NM34	3/4"NPT (M)	NF34	3/4"NPT (F)

OPTIONS 9

Several options are available; they should be indicated one after the other.

1	316L casing and ring
2	SEKURIT window
3	External adjustment of zero
4	Priming liquid (silicone oil -200°C)
5	Priming liquid (glycerine -65°C)
6	VITON seal
7	Certificate 2.2
A	316L label
B	304L label
C	Label on casing
D	Atex

For any other configuration, please contact us.

TBM2
WITH MULTIDIRECTIONAL DIAL

IMMERSED UP TO 1500 MM | DIAL DIAMETER 80 TO 150 MM | IP 67 | CLASS 1

DESCRIPTION

Bimetallic thermometer with multidirectional dial. Adjustable zero. For corrosive liquids and gases in the agri-food industry, pharmacy, chemicals, petrochemicals and the nuclear sector.

SPECIFICATIONS

Accuracy class		Class 1 (CL 1.0)
Ambient temperature		-20...+60 °C
Storage temperature		-50...+70 °C
Scale overrun		110 % of full scale (E.m.)
Plunger PN		25 bar (without thermowell)
Weld seams		Arc welding / Argon TIG
Measuring element		Helicoidal bimetallic
Materials	Casing and window	Stainless steel AISI 304
	Plunger and connector	Stainless steel AISI 316
	Dial	Aluminium, black graduations on white background
	Needle	Aluminium, black coating, adjustable zero
	Window	Glass, SEKURIT glass
	Seals	Neoprene
Process connection		1/2" NPT or BsP / male
		1/4" NPT or BsP / male (for plunger Ø ≤ 6.35 mm)
		3/8" BsP / male (for plunger Ø ≤ 10 mm)
		3/4" NPT or BsP / male
		m20 x 1.5 / male, m27 x 2 / male
Protection		IP 65, IP 66, IP 67

up to 600°C

ATEX OPTION

DESIGN YOUR THERMOMETER

CONFIGURATOR CODE

Parameters to be indicated when ordering. Example:

STANDARD MODEL		CASING		RANGE		MOUNTING		IMMERSED Ø		PROT.		IMMERSED LENGTH		PROCESS CONNECTION TYPE		PROCESS CONNECTOR		OPTIONS (OPTION)
TBM2	-	150	-	EG3	-	2D	-	14	-	P5	-	250	-	RT	-	NM27	-	D
Reference in table and diagram		1		2		3		4		5		6		7		8		9
Possible choice		80 100 125 150		EA1 / EA2 / EB2 / EB3 EG1 / EG2 / EG3 / EG4 EG5 / EG6 / EG8 / EG9 EH1 /EH2 / EH3 /EH4		2D		60 14 80 95 10 12		P5 P6 P7 HS		110 mm to 1500 mm		RX RG RT		NM12 / BM12 NM14 / BM14 MM20 / BM38 TR15 / NM34 BM34 / NM27		1 / 2 3 / 4 5 / 6 7 / A B / C D

DIAGRAM (MM)

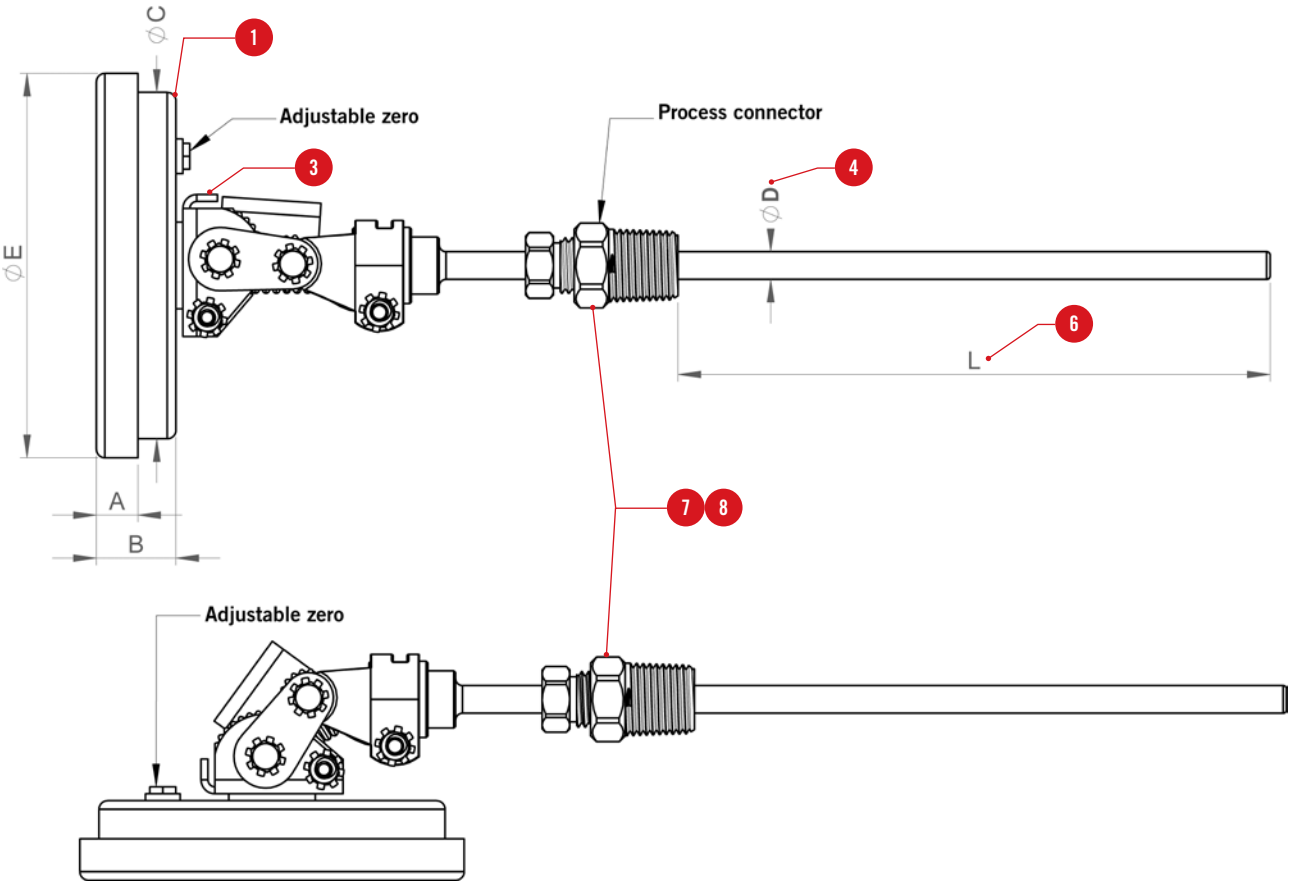

1

	A	B	ØC	ØD	Weight (g)
80	9.5	23	80	89.5	-
100	12	23	100	111	-
125	15	23	118.5	129	662
150	15	23	149	161	839

CASING 1

080	80mm / 3"	125	125mm / 4"1/2
100	100mm / 4"	150	150mm / 6"

MEASUREMENT RANGE (°C) 2

EA1	-20…+40 °C	EG3	0…+80 °C	EH1	0…+300 °C
EA2	-20…+60 °C	EG4	0…+100 °C	EH2	0…+400 °C
EB2	-30…+70 °C	EG5	0…+120 °C	EH3	0…+500 °C
EB3	-30…+120 °C	EG8	0…+200 °C	EH4	0…+600 °C
EG1	0…+50 °C	EG9	0…+250 °C		
EG2	0…+60 °C	EG6	0…+150 °C		

MOUNTING 3

2D	Centre, rear, multidirectional

IMMERSED DIAMETER 4

60	6.0 mm	95	9.5 mm
14	1/4" (6,35mm)	10	10 mm
80	8.0 mm	12	12 mm

PROTECTION 5

P5	IP65	P7	IP67
P6	IP66	HS	Hermetically sealed

IMMERSED LENGTH 6

xxxx	110 mm to 1500 mm

MIN. IMMERSED LENGTH 6

Immersed diameter	6 mm - 1/4"	8 mm	10 mm	12 mm
Measurement range (°C)	Min. immersed length (mm)			
0…50	130	110	110	110
0…60	110	95	95	95
0…80	95	70	70	70
0…100	75	70	70	70
0…120	70	60	60	60
0…150	60	50	50	50
0…200	50	45	45	45
0…250	40	35	35	35
0…300	60	50	50	50
0…400	50	45	45	45
0…500	45	40	40	40
0…600	40	35	35	35

PROCESS CONNECTION TYPE 7

RX	Fixed	RG	Adjustable	RT	Pivoting / Rotary

PROCESS CONNECTOR 8

NM12	1/2"NPT (M)	MM20	M20*1.5mm (M)	BM34	3.4" BSP (M)
BM12	1/2"BSP(M)	BM38	3/8" BSP (M)	NM27	M27 x 1.5mm (M)
NM14	1/4"NPT(M)	TR15	1.5" Triclover		
BM14	1/4"BSP (M)	NM34	3/4"NPT (M)		

OPTIONS 9

Several options are available. They should be indicated one after the other.

1	316L casing and ring
2	SEKURIT window
3	External adjustment of zero
4	Priming liquid (silicone oil -200°C)
5	Priming liquid (glycerine -65°C)
6	VITON seal
7	Certificate 2.2
A	316L label
B	304L label
C	Label on casing
D	Atex

For any other configuration, please contact us.

TDG1

GAS EXPANSION THERMOMETER

CAPILLARY UP TO 25 M | IMMERSED UP TO 2 M | DIAL DIAMETER 100 TO 250 MM | IP 67

DESCRIPTION

Gas expansion thermometer. Multiple mounting possibilities. For corrosive liquids and gases in the chemicals and petrochemicals sectors.

SPECIFICATIONS

Accuracy class		Class 1 (CL 1.0)
Ambient temperature		0...40 °C
Storage temperature		-50...+70 °C (without filler liquid) / -20...+60 °C (with filler liquid)
Scale overrun		110 % of full scale (E.m.)
Plunger PN		25 bar (without thermowell)
Weld seams		arc welding / Argon TIG
Measuring element		Capsule of inert, non-toxic gas
Materials	Casing and window	Stainless steel AISI 304
	Plunger and connector	Stainless steel AISI 316
	Dial	Aluminium, black graduations on white background
	Needle	Aluminium, black coating, adjustable zero
	Window	Glass or SEKURIT glass (depending on filling)
	Seals	Neoprene or NBr (depending on filling)
Process connection		1/2" NPT or BsP / male
		1/4" NPT or BsP / male (for plunger Ø ≤ 6.35 mm)
		3/8" BsP / male (for plunger Ø ≤ 10 mm)
		m20 x 1.5 / male
Protection		IP 65, IP 66, IP 67

CLASS 1

up to 700°C

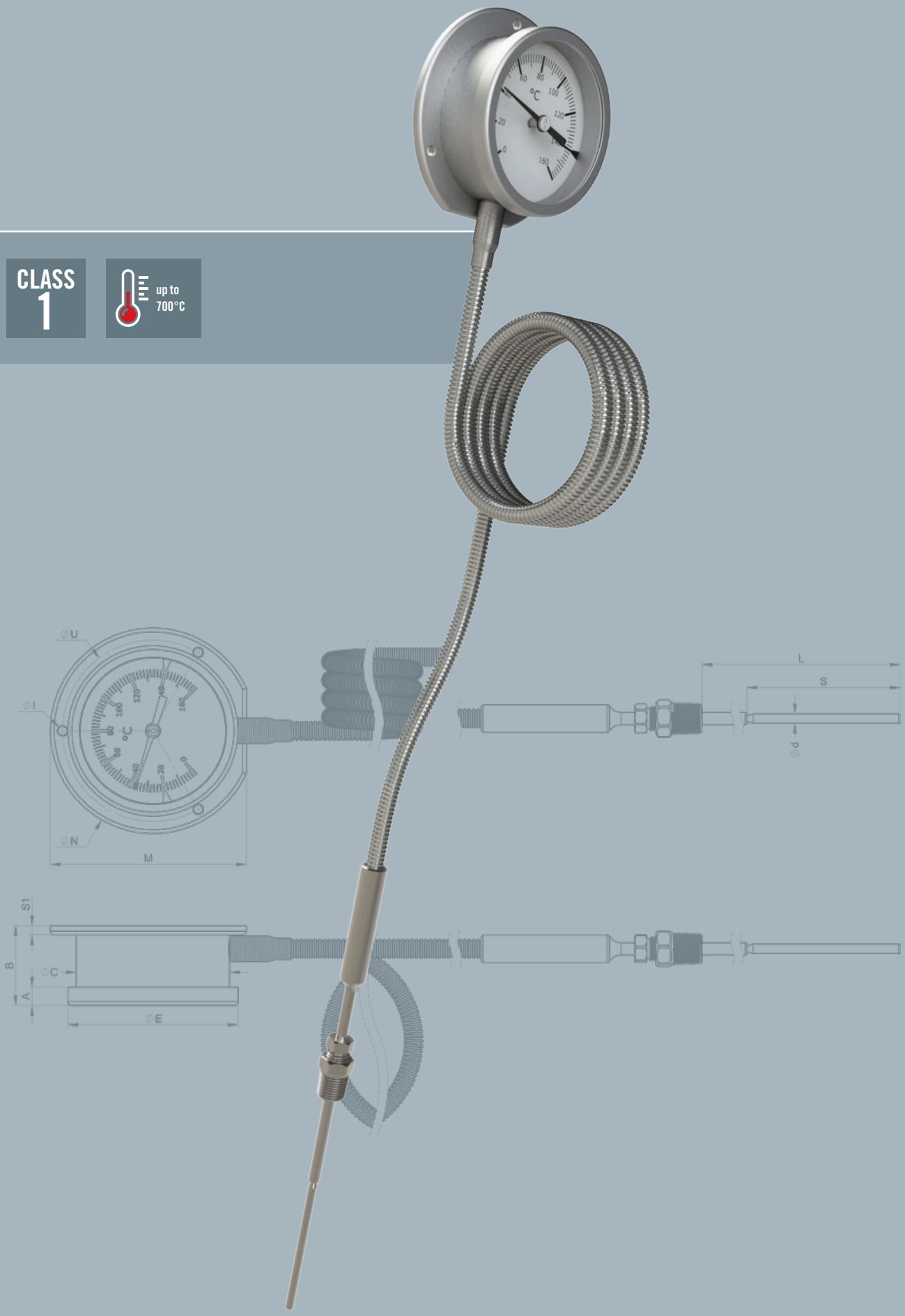

DESIGN YOUR THERMOMETER

CONFIGURATOR CODE

Parameters to be indicated when ordering. Example:

MODEL TYPE		CASING		RANGE		MOUNTING		Ø IMMERSED		PROTECTION		IMMERSED LENGTH
TDG1	-	100	-	EA2	-	1A	-	60	-	P6	-	820
Reference in table and diagram		1		2		3		4		5		6
Possible choice		100 125 150 250		EA1 / EA2 / EA3 / EA4 / EA5 / EA6 EB1 / EB2 / EC1 / EC2 / ED1 / EF1 EG1 / EG2 / EG3 / EG4 / EG5 / EG6 EG7 / EG8 / EG9 / EH1 / EH2 / EH3 EH4 / EH5 / EJ1 / EK1 / Ek2		1A / 1B / 1C 1D / 2A / 2B		60 / 14 80 / 95 10 / 12		P5 P6 P7 HS		100 mm to 2000 mm

DIAGRAM (MM)

3 **1A** Lower output

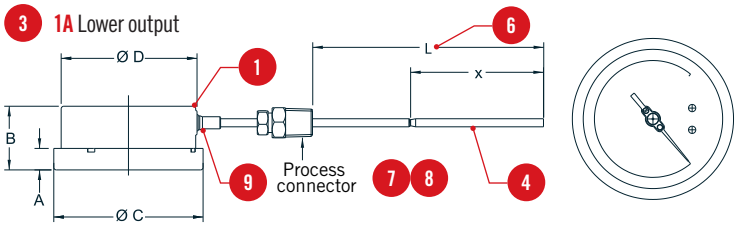

1	A	B	ØC	ØD
100	12	48	111	100
125	15	48	129	118,5

3 **1B**

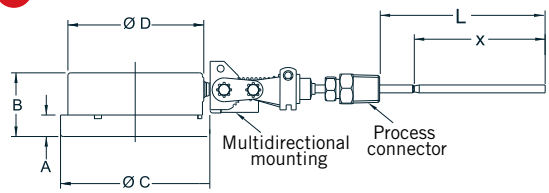

1	A	B	ØC	ØD
150	15	48	161	149
250	18,5	50	263	250

3 **1C**

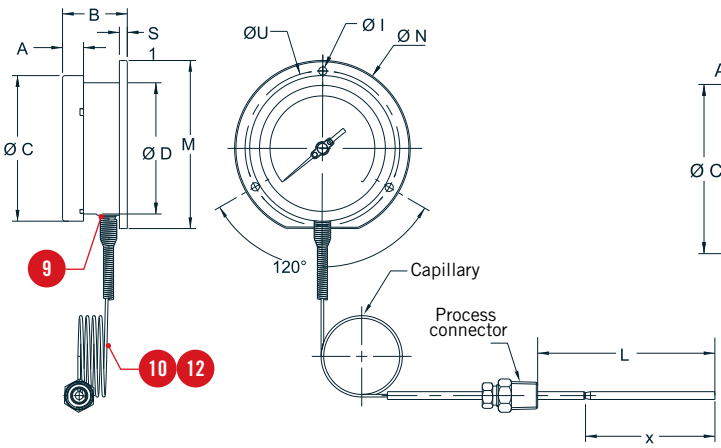

1	A	B	ØC	ØD	ØI	ØN	M	S1	ØU
100	12	52	111	100	6	134	128	6	118
125	15	50	129	118.5	6	150	143.5	4	137
150	15	52	161	149	6	186	172.4	6	168
250	18.5	51.5	263	250	7	290	286.5	1.5	276

3 **1D**

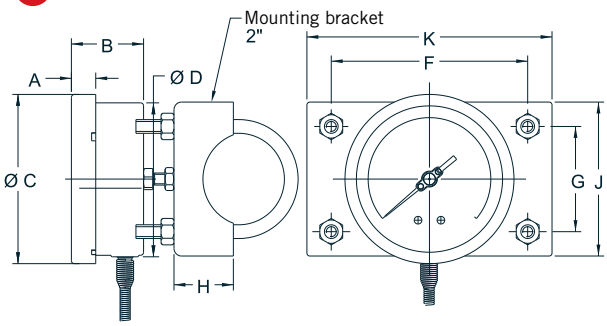

1	A	B	ØC	ØD	F	G	H	J	K
For casing dimensions, please see 1A, 1B					129	69	39	101	161

3 **2A** Central output

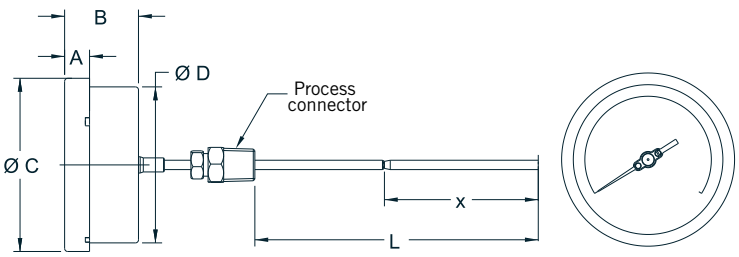

3 **2B**

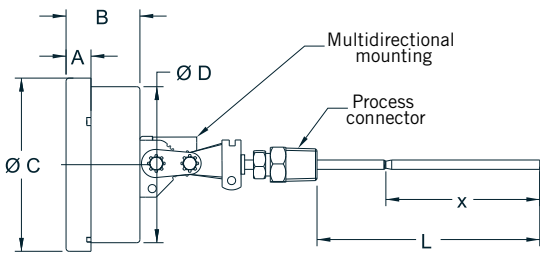

For casing dimensions, please see 1A, 1B

PROCESS CONNECTION TYPE		PROCESS CONNECTOR		ASSEMBLY		CAPILLARY MATERIAL		ARMOURING		CAPILLARY LENGTH		OPTION OPTIONS
RX	-	NM34	-	CT	-	AC	-	AC	-	2,850	-	D
7		8		9		10		11		12		13
RX RG RT		NM12 / BM12 / NM14 / BM14 MM20 / BM38 / TR15 / NM34 BM34 / NM27 / NF12 / NF34		ST CT		304L : AB 316L : AC		304L : AB 316L : AC PVC : HF		250 mm to 25,000 mm		1 / 2 / 3 / 4 5 / 6/ 7 / 8 9 / A/ B / C D

CASING (1)

100	100mm / 4"	150	150mm / 6"
125	125mm / 4"1/2	250	250mm /10"

MEASUREMENT RANGE (°C) (2)

EA1	-20…+40 °C	ED1	-50…+100°C	EG9	0…+250 °C
EA2	-20…+60 °C	EF1	-100…+60°C	EH1	0…+300 °C
EA3	-20…+80 °C	EG1	0…+50 °C	EH2	0…+400 °C
EA4	-20…+100 °C	EG2	0…+60 °C	EH3	0…+500 °C
EA5	-20…+120 °C	EG3	0…+80 °C	EH4	0…+600 °C
EA6	-20…+180 °C	EG4	0…+100 °C	EH5	0…+650 °C
EB1	-30…+50 °C	EG5	0…+120 °C	EJ1	50…+650 °C
EB2	-30…+70 °C	EG6	0…+150 °C	EK1	100…+600 °C
EC1	-40…+40 °C	EG7	0…+160 °C	EK2	150…+700 °C
EC2	-40…+60 °C	EG8	0…+200 °C		

MOUNTING (3)

Lower output		Central output	
1A	Direct	2A	Rear
1B	Multidirectional	2B	Multidirectional
1C	Mounting on wall / surface		
1D	2" pipe mounting		

IMMERSED DIAMETER (4)

60	6.0 mm	95	9.5 mm
14	1/4" (6.35mm)	10	10 mm
80	8.0 mm	12	12 mm

PROTECTION (5)

P5	IP65	P7	IP67
P6	IP66	HS	Hermetically sealed

For any other configuration, please contact us.

IMMERSED LENGTH (6)

xxxx	100 mm to 2000 mm

PROCESS CONNECTION TYPE (7)

RX	Fixed	RG	Adjustable	RT	Pivoting / Rotary

PROCESS CONNECTOR (8)

NM12	1/2"NPT (M)	MM20	M20*1.5mm (M)	BM34	3.4" BSP (M)
BM12	1/2"BSP(M)	BM38	3/8" BSP (M)	NM27	M27 x 1.5mm (M)
NM14	1/4"NPT(M)	TR15	1.5" Triclover	NF12	/2"NPT (F)
BM14	1/4"BSP (M)	NM34	3/4"NPT (M)	NF34	3/4"NPT (F)

ASSEMBLY (9)

ST	direct (plunger)	CT	remote (capillary)

CAPILLARY MATERIAL (10)

AB	304L	AC	316L

ARMOURING (11)

AB	304 L	AC	316 L	HF	PVC (Max. ambient temp. 60°C)

CAPILLARY LENGTH (12)

xxxx	250 to 25,000mm

OPTIONS (13)

Several options are available. They should be indicated one after the other.

1	316L casing and ring
2	SEKURIT window
3	External adjustment of zero
4	Priming liquid (silicone oil -200°C)
5	Priming liquid (glycerine -65°C)
6	VITON seal
7	Certificate 2.2
8	Filling with helium
9	Maximum reading pointer
A	316L label
B	304L label
C	Label on casing
D	Atex

CHAUVIN ARNOUX
Immeuble Front Office
12 - 16 rue Sarah Bernhardt
92600 Asnières-sur-Seine
Tel. : +33 1 44 85 44 85
Fax : +33 1 46 27 07 48
info@chauvin-arnoux.fr
www.chauvin-arnoux.com

CHAUVIN ARNOUX METRIX
Immeuble Front Office
12 - 16 rue Sarah Bernhardt
92600 Asnières-sur-Seine
Tel. : +33 1 44 85 44 85
Fax : +33 1 46 27 07 48
info@chauvin-arnoux.fr
www.chauvin-arnoux.com

CHAUVIN ARNOUX ENERGY
16, rue Georges Besse
92182 Antony Cedex - France
Tel. : +33 1 75 60 10 30
Fax : +33 1 46 66 62 54
info@enerdis.fr
www.chauvin-arnoux-energy.com

MANUMESURE
9, allée Jean Prouvé
92110 Clichy - France
Tel. : +33 1 75 61 01 80
Fax : +33 1 47 33 28 02
info@manumesure.fr
www.manumesure.fr

YOUR CONTACTS

FRANCE
SOUTH-WEST SECTOR
Telephone: +33 (0)4 72 14 16 31
sud.est@pyrocontrole.fr

WEST SECTOR
Telephone: +33 (0)4 81 76 02 55
ouest@pyrocontrole.fr

ILE-DE-FRANCE/NORTH-EAST SECTOR
Telephone: +33 (0)4 81 76 02 54
idf.nord.est@pyrocontrole.fr

INTERNATIONAL
PYROCONTROLE EXPORT DEPARTMENT
Telephone: +33 (0)4 72 14 15 40
export@pyrocontrole.com

10 SUBSIDIARIES WORLDWIDE

GERMANY
CHAUVIN ARNOUX GMBH
Ohmstraße 1
77694 KEHL / RHEIN
Tel.: +49 7851 99 26-0
Fax: +49 7851 99 26-60
info@chauvin-arnoux.de
www.chauvin-arnoux.de

AUTRICHE
CHAUVIN ARNOUX GES.M.B.H
Gastgegasse 27
1230 WIEN
Tél. : +43 1 61 61 9 61
Fax : +43 1 61 61 9 61-61
vie-office@chauvin-arnoux.at
www.chauvin-arnoux.at

CHINA
SHANGHAI PU-JIANG ENERDIS INSTRUMENTS CO. LTD
3 Floor, 23 Building
Gemdale Viseen Minhang Technology
& Industrial Park Project
1288 lane, Zhongchun Road Minhang
District, SHANGHAI City.
Tél. : +86 21 65 21 51 96
Fax : +86 21 65 21 61 07
info@chauvin-arnoux.com.cn

SPAIN
CHAUVIN ARNOUX IBÉRICA SA
C/ Roger de Flor N°293
1a Planta
08025 BARCELONA
Tel. : +34 902 20 22 26
Fax : +34 934 59 14 43
info@chauvin-arnoux.es
www.chauvin-arnoux.es

ITALY
AMRA SPA
Via Sant'Ambrogio, 23
20846 MACHERIO (MB)
Tel. : +39 039 245 75 45
Fax : +39 039 481 561
info@amra-chauvin-arnoux.it
www.chauvin-arnoux.it

MIDDLE EAST
CHAUVIN ARNOUX MIDDLE EAST
PO Box 60-154
1241 2020 JAL EL DIB
(Beirut) - LEBANON
Tel. : +961 1 890 425
Fax : +961 1 890 424
camie@chauvin-arnoux.com
www.chauvin-arnoux.com

UNITED KINGDOM
CHAUVIN ARNOUX LTD
Unit 1 Nelson Ct, Flagship Sq
Shaw Cross Business Pk, Dewsbury
West Yorkshire - WF12 7TH
Tel. : +44 1924 460 494
Fax : +44 1924 455 328
info@chauvin-arnoux.co.uk
www.chauvin-arnoux.com

SCANDINAVIA
CA MÄTSYSTEM AB
Sjöflygvägen 35
SE-183 62 TABY
Tel. : +46 8 50 52 68 00
Fax : +46 8 50 52 68 10
info@camatsystem.com
www.camatsystem.com

SWITZERLAND
CHAUVIN ARNOUX AG
Moosacherstrasse 15
8804 AU / ZH
Tel. : +41 44 727 75 55
Fax : +41 44 727 75 56
info@chauvin-arnoux.ch
www.chauvin-arnoux.ch

USA
CHAUVIN ARNOUX INC
d.b.a AEMC Instruments
15 Faraday Drive
Dover - NH 03820
Tel. : +1 (800) 945-2362
Fax : +1 (603) 742-2346
sales@aemc.com
www.aemc.com

906 131 137 - Ed.1 - 2020 - Non-contractual document - Please confirm specifications when ordering - Photos and illustrations non-contractual.

poissons.agency

FRANCE
PYROCONTROLE
6 bis, av du Docteur Schweitzer
69881 Meyzieu Cedex - France
Tel. : +33 4 72 14 15 40
Fax : +33 4 72 14 15 41
info@pyrocontrole.com
www.pyrocontrole.com

MIDDLE EAST
Chauvin Arnoux Middle East
P.O. BOX 60-154
1241 2020 JAL EL DIB -
LEBANON
Tel: +961 1 890 425
Fax: +961 1 890 424
camie@chauvin-arnoux.com
www.chauvin-arnoux.com

UNITED KINGDOM
Chauvin Arnoux Ltd
Unit 1 Nelson Ct, Flagship Sq,
Shaw Cross Business Pk
Dewsbury, West Yorkshire -
WF12 7TH
Tel: +44 1924 460 494
Fax: +44 1924 455 328
info@chauvin-arnoux.co.uk
www.chauvin-arnoux.com

CHAUVIN ARNOUX