CHAUVIN ARNOUX
PYROCONTROLE

SENSORS CATALOGUE

TEMPERATURE MEASUREMENT IN INDUSTRIAL ENVIRONMENTS

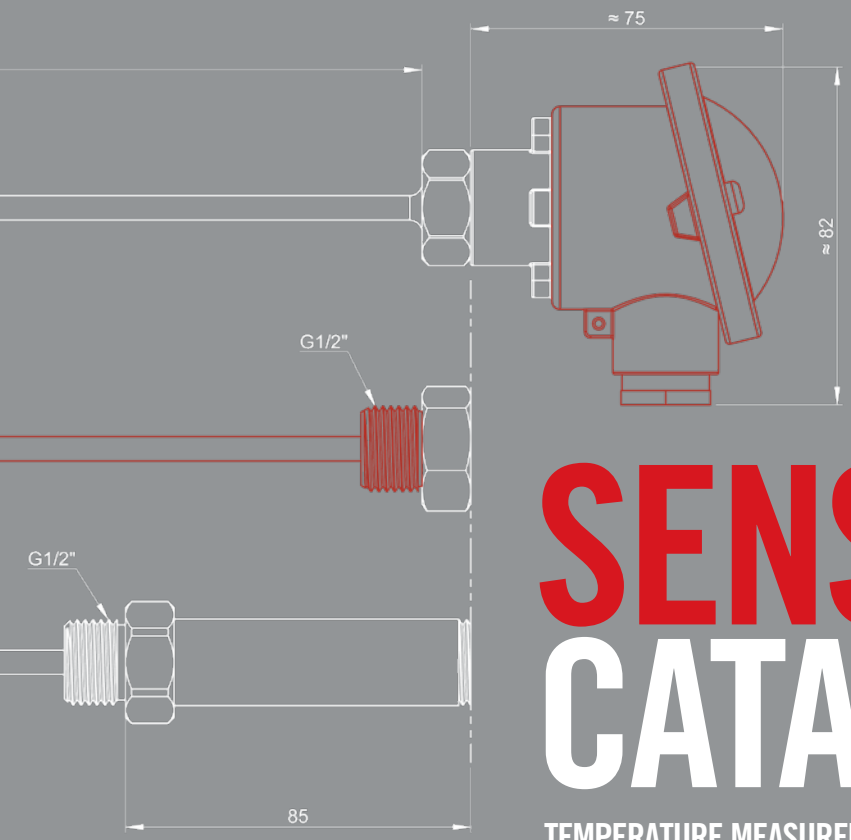

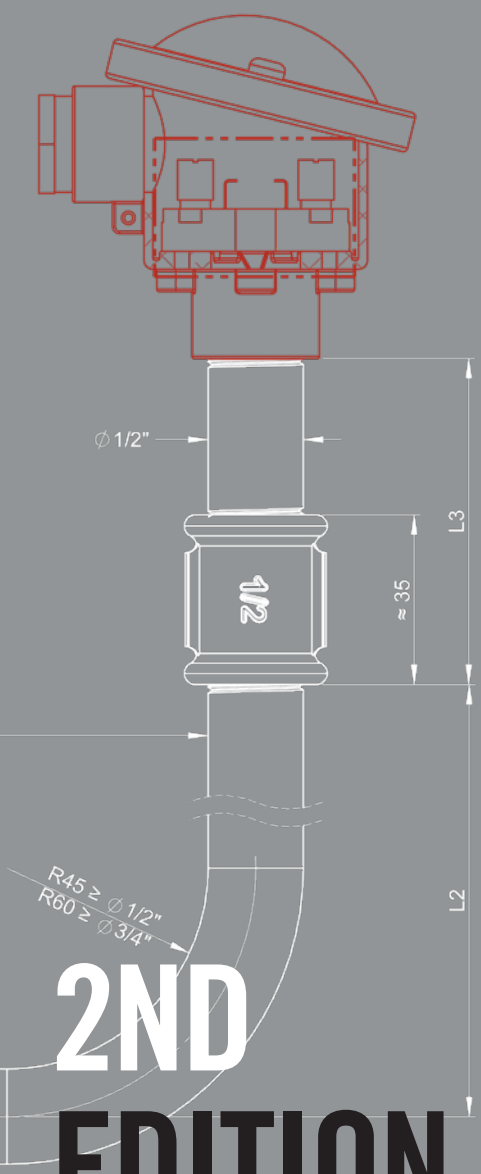

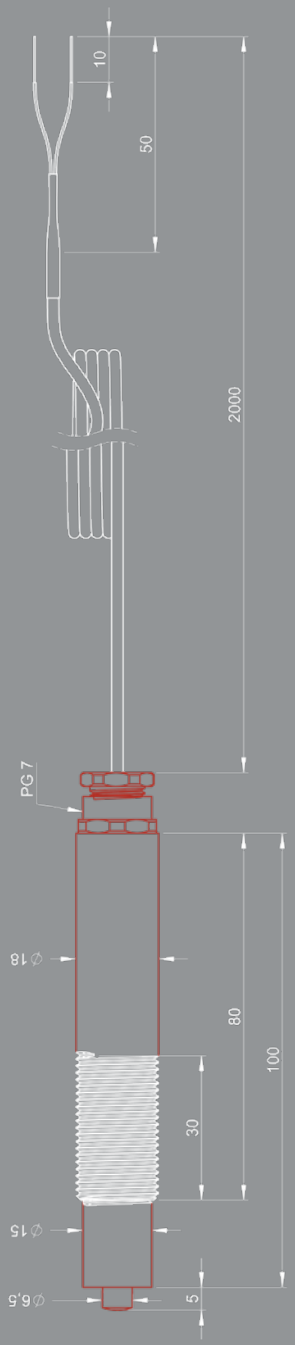

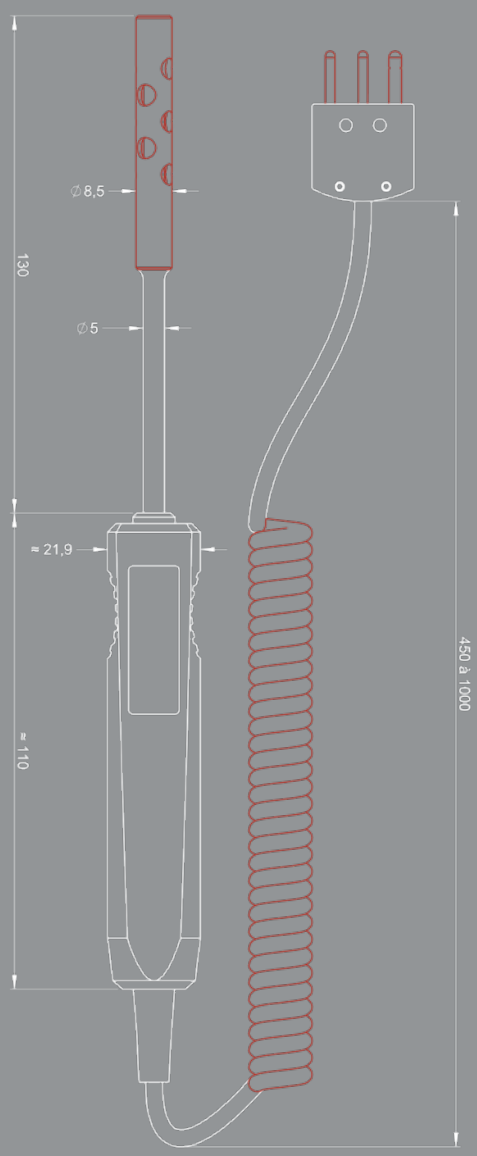

2ND EDITION

Measure up

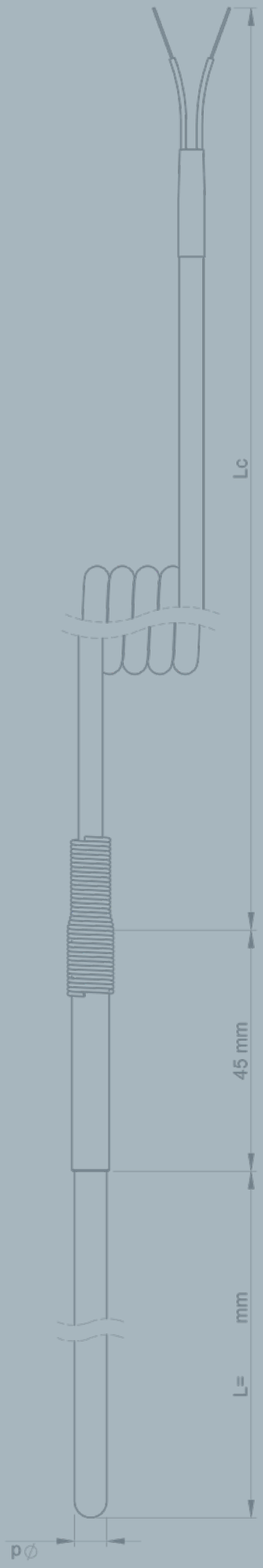

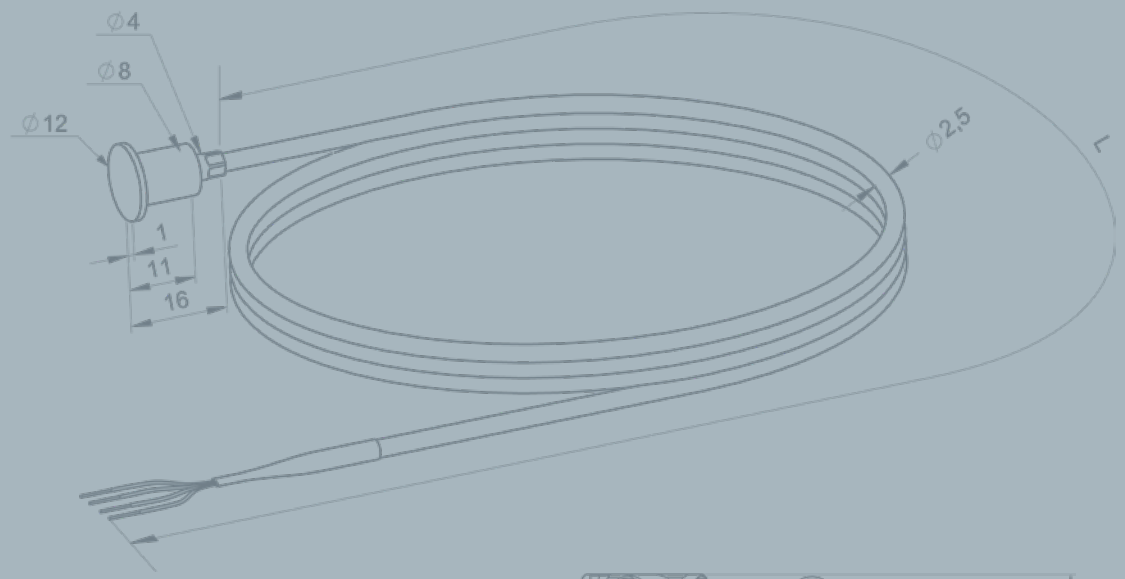

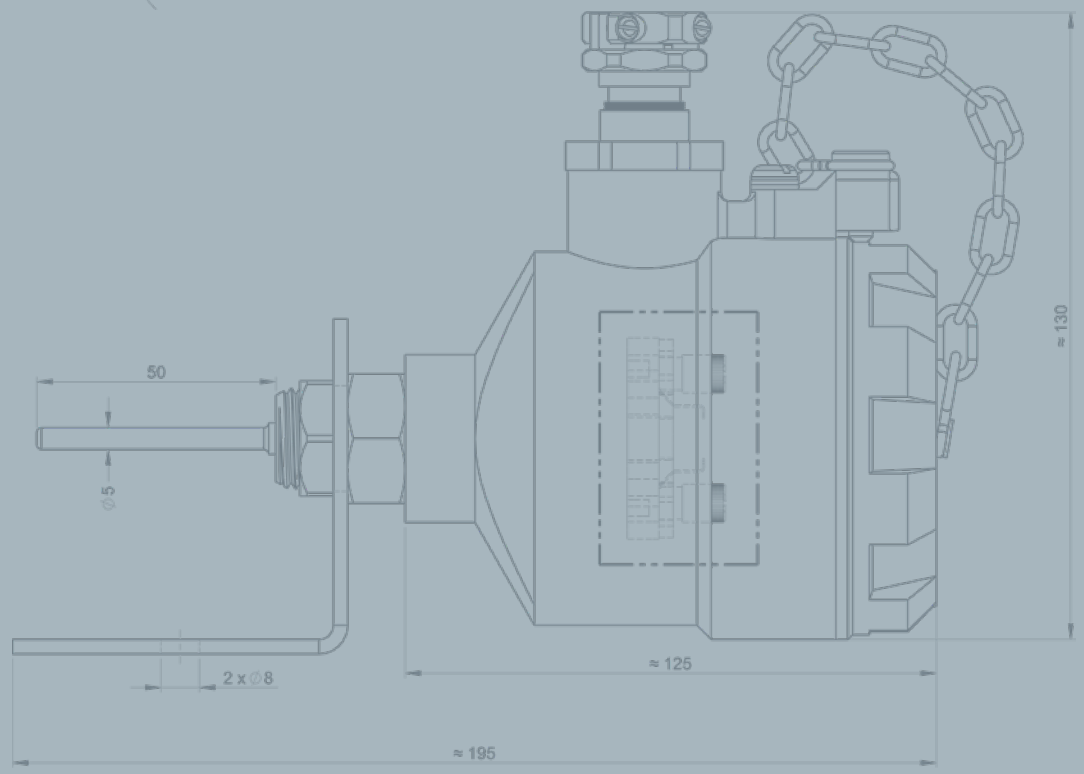

ACCESSORIES

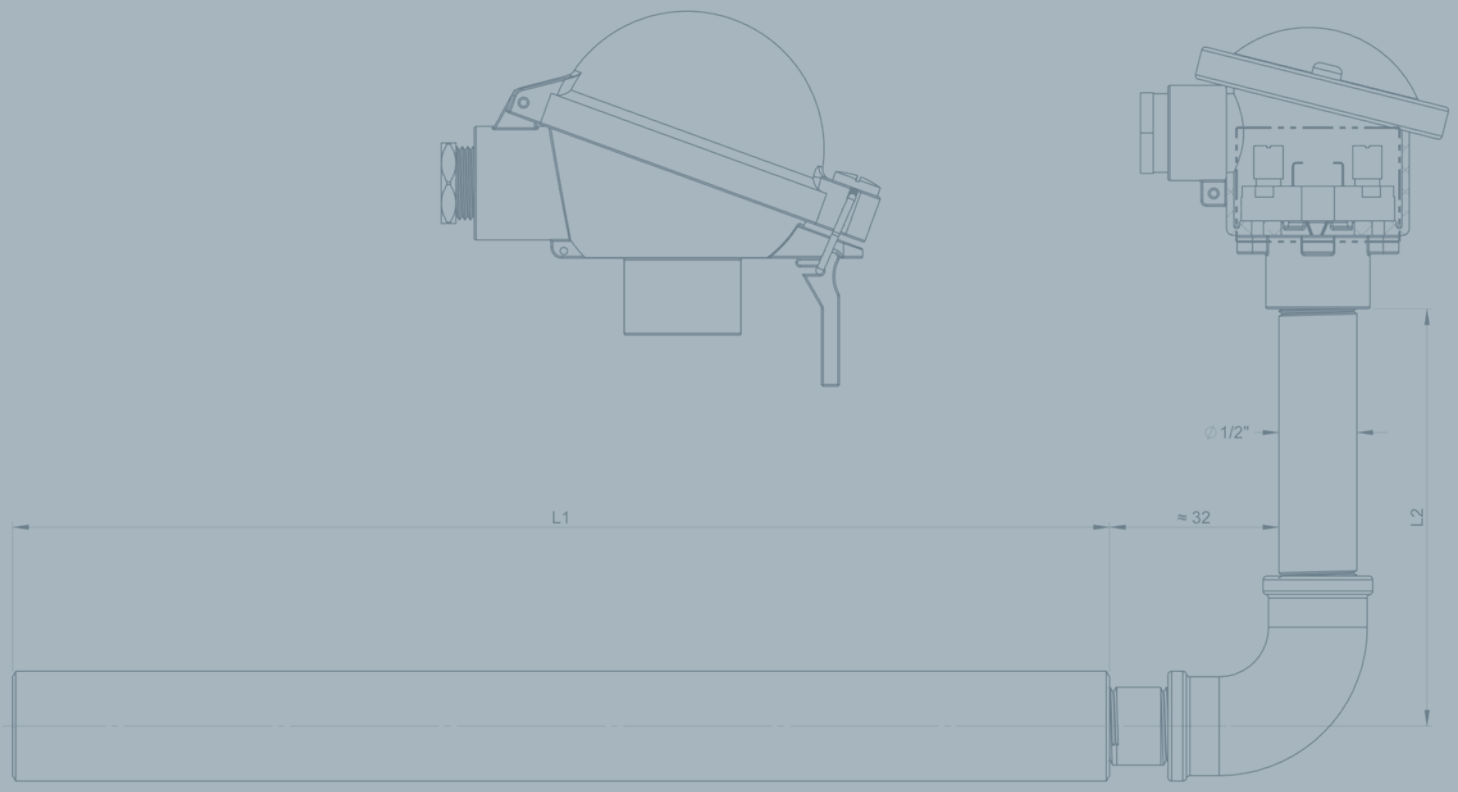

ELECTRICAL CONNECTIONS 340

WIRES AND CABLES 342

FASTENING COMPONENTS 344

TERMINAL STRIPS - ASSEMBLY-HEAD TRANSMITTERS 346

HEADS - CABLE GLANDS 347

PORTABLE DIGITAL THERMOMETERS 348

ELECTRICAL CONNECTIONS

CONNECTORS FOR PT100 Ω

- For Pt100 Ω sensors, 3-wire mounting
- Temperature withstand -50°C to +210 °C
- Cable clamp for the miniature and standard connectors available as an option

Standard connector

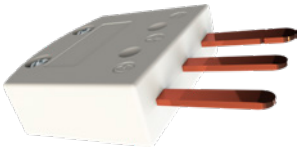

Miniature connector

Male or female	Type	No. of pins	Dimensions L x w x h	Code
Male	Standard	3	35 x 25 x 12.5	L018290-000
Female				L018211-004
Cable clamp for standard 3-pin connector				L018250-017
Male	Miniature	3	19 x 24 x 8	L018280-000
Female				L018200-005
Cable clamp for miniature 3-pin connector				L018200-006

COMPENSATED CONNECTORS FOR THERMOCOUPLES

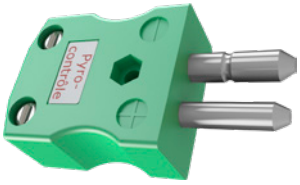

Standard connector

Miniature connector

Male or female	Single or duplex	Type of thermocouple							
		Size	Section	Type J	Type K	Type T	Type N	Type S	Cu-Cu Type B
Male	Single	Standard	Rectangle	L12547J-000	L12547K-000	L12547T-000	L12547N-000	L12547S-000	L12547C-000
		Miniature	Rectangle	L12587J-000	L12587K-000	L12587T-000	L12587N-000	L12587S-000	L12587C-000
	Duplex	Standard	Rectangle	L12543J-000	L12543K-000	L12543T-000	L12543N-000	L12543S-000	L12543C-000
Female	Single	Standard	Rectangle	L12548J-000	L12548K-000	L12548T-000	L12548N-000	L12548S-000	L12548C-000
		Miniature	Rectangle	L12588J-000	L12588K-000	L12588T-000	L12588N-000	L12588S-000	L12588C-000
	Duplex	Standard	Rectangle	L12544J-000	L12544K-000	L12544T-000	L12544N-000	L12544S-000	L12544C-000
Female socket for panel	Single	Standard	Rectangle	L12545J-000	L12545K-000	L12545T-000	L12545N-000	L12545S-000	L12545C-000
		Standard	Circular	L12546J-000	L12546K-000	-	-	L12546S-000	-
		Miniature	Rectangle	L12585J-000	L12585K-000	L12585T-000	L12585N-000	L12585S-000	L12585C-000
			Rectangle*	L12584J-000	L12584K-000	L12584T-000	L12584N-000	L12584S-000	L12584C-000

* With two mounting lugs

TERMINAL STRIPS FOR THERMOCOUPLES

Number of circuits	Size	Type J	Type K	Type T	Type S	Cu-Cu Type B
1	Standard	L12549J-000	L12549K-000	L12549T-000	L12549S-000	L12549C-000

CABLE CLAMP

- For connecting thermocouple wires, extension cables or compensation cables
- Temperature withstand -50 °C to +210 °C
- Colour coding as per IEC 584-3 (NFC42324)

Miniature cable clamp

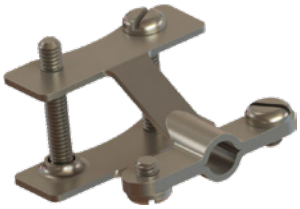

Standard cable clamp

Connector type	Single or duplex	Code
Standard	Single	L125490-000
Miniature	Single	L125890-000
Standard	Duplex	L125499-000

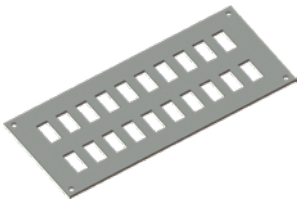

Standard size panel

PANELS FOR FEMALE THERMOCOUPLE CONNECTORS

Connector type	Number of circuits	Code
Standard size, rectangular face	1	L125401-000
	2	L125402-000
	3	L125403-000
	4	L125404-000
	5	L125405-000
	6	L125406-000
	8	L125408-000
	10	L125410-000
	12	L125412-000
	16	L125416-000
	20	L125420-000
	24	L125424-000
Miniature size, rectangular face	1	L125801-000
	2	L125802-000
	3	L125803-000
	4	L125804-000
	5	L125805-000
	6	L125806-000
	8	L125808-000
	10	L125810-000
	12	L125812-000
	16	L125816-000
	20	L125820-000
	24	L125824-000

WIRES AND CABLES

FOR THERMOCOUPLE COMPENSATION

Type	Coating	"Tolerance class"	"Ø wire"	"External Ø"	Conditioning	Code
Type T	Bare wire	2	1.5mm		by the metre	L209114-000
	FEP insulation		0.2 mm	0.4 mm	25 m coil	L218101-000
			0.3 mm	1.1 mm	25 m coil	L218102-000
			0.5 mm	1.3 mm	25 m coil	L218103-000
			0.2 mm	0.4 mm	100 m coil	L217101-000
			0.3 mm	1.1 mm	100 m coil	L217102-000
			0.5 mm	1.3 mm	100 m coil	L217103-000
	Glass silk insulation		0.5 mm	1.5 x 2.4	by the metre	L219123-000
Type J	Bare wire	2	1.60 mm		by the metre	L209214-000
	FEP insulation		0.2 mm	0.4 mm	25 m coil	L218201-000
					100 m coil	L217201-000
			0.3 mm	1.1 mm	25 m coil	L218202-000
					100 m coil	L217202-000
			0.5 mm	1.3 mm	25 m coil	L218203-000
					100 m coil	L217203-000
	Glass silk insulation		0.5 mm	1.5x 2.4	by the metre	L219223-000
			0.8 mm	2 x 3	by the metre	L219225-000
			7 x 0.2 mm	1.4 x 2.2	by the metre	L219228-000
			1 mm	2.7 x 4.2	by the metre	L219246-000
	Glass silk insulation with stainless-steel braid		7 x 0.2 mm	3	by the metre	L219237-000
			7 x 0.2 mm	2.2 x 3.2	by the metre	L219238-000
Type K	Bare wire	1	0.51 mm		by the metre	L209409-000
			0.60 mm		by the metre	L209410-000
			1.02 mm		by the metre	L209412-000
			1.62 mm		by the metre	L209414-000
			2.3 mm		by the metre	L209415-000
			2.9 mm		by the metre	L209417-000
	FEP insulation	2	0.2 mm	0.4 mm	25 m coil	L218401-000
					100 m coil	L217401-000
			0.3 mm	1.1 mm	25 m coil	L218402-000
					100 m coil	L217402-000
			0.5 mm	1.3 mm	25 m coil	L218403-000
					100 m coil	L217403-000
	Glass silk insulation	1	0.51 mm	1.02 mm	by the metre	L219413-000
			0.25 mm	0.9 x 1.3	by the metre	L219421-000
			0.3 mm	1.1 x 1,8	by the metre	L219422-000
			0.5 mm	1.3 x 2.2	by the metre	L219423-002
			0.6 mm	1.6 x 2.6	by the metre	L219424-000
			1 mm	2.7 x 4.2	by the metre	L219446-000
	Ceramic coating	1	0.2 mm	2.3 x 3.2	by the metre	L219438-000
	Glass silk insulation with stainless-steel braid	1	0.8 mm	2.4 x 4.0	by the metre	L219465-000
Type S	Bare wire	2	0.35 mm		by the metre	L209608-000
	Bare wire		0.50 mm		by the metre	L209609-000
Type R	Bare wire	2	0.50 mm		by the metre	L209709-000
Type W/Re	Bare wire		0.50 mm		by the metre	L209909-000

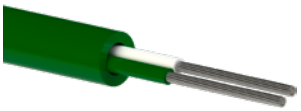

Cable type A

Cable type B

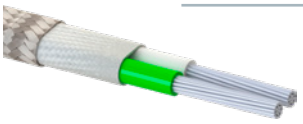

Cable type C

EXTENSION AND PROLONGATION FOR THERMOCOUPLES

TC type	No. TC	External sheath	Ext. Ø mm	X/C(1)	Class(2)	Ø cond.	Cable Type	By metre	50 m coil	100 m coil	250 m coil
T	1 TC	PVC	4	X	1	3 x 0.3	B	L929101-120	L921101-120	L922101-120	L923101-120
J	1 TC	PVC	4	X	1	3 x 0.3	B	L929201-120	L921201-120	L922201-120	L923201-120
			5	X	2	7 x 0.3	B	L929215-120	L921215-120	L922215-120	L923215-120
			7	X	2	14 x 0.3	B	L929214-110	L921214-110	L922214-110	L923214-110
			7.5	X	2	19 x 0.3	A	L929208-110	L921208-110	L922208-110	L923208-110
			7.8	X	2	19 x 0.3	B	L929203-110	L921203-110	L922203-110	L923203-110
		Silicone	5	X	1	7 x 0.3	B	L929206-120	L921206-120	L922206-120	L923206-120
		FEP	3.5	X	1	7 x 0.2	B	L929210-120	L921210-120	L922210-120	L923210-120
		GS(3)	4 x 6	X	1	19 x 0.3	C	L929209-120	L921209-120	L922209-120	L923209-120
			4 x 6	X	1	14 x 0.3	C	L929218-120	L921218-120	L922218-120	L923218-120
	2 TC	PVC	5	X	1	3 x 0.3	B	L929301-120	L921301-120	L922301-120	L923301-120
K	1 TC	PVC	4	X	1	3 x 0.3	B	L929401-120	L921401-120	L922401-120	L923401-120
			5	C	2	7 x 0.3	B	L929515-110	L921515-110	L922515-110	L923515-110
			7	C	2	14 x 0.3	B	L929514-110	L921514-110	L922514-110	L923514-110
			7.5	C	2	19 x 0.3	A	L929408-110	L921408-110	L922408-110	L923408-110
			7.8	C	2	19 x 0.3	B	L929403-110	L921403-110	L922403-110	L923403-110
		Silicone	4.2	X	1	7 x 0.2	B	L929416-120	L921416-120	L922416-120	L923416-120
			5	X	1	7 x 0.3	B	L929406-120	L921406-120	L922406-120	L923406-120
		FEP	3.5	X	1	7 x 0.2	B	L929410-120	L921410-120	L922410-120	L923410-120
		GS(3)	4 x 6	C	2	19 x 0.3	C	L929409-110	L921409-110	L922409-110	L923409-110
			4 x 5	X	1	14 x 0.3	C	L929417-120	L921417-120	L922417-120	L923417-120
			4 x 6	X	1	14 x 0.3	C	L929418-120	L921418-120	L922418-120	L923418-120
	2 TC	PVC	5	C	2	3 x 0.3	B	L929701-110	L921701-110	L922701-110	L923701-110
S	1 TC	PVC	4	C	2	3 x 0.3	B	L929601-110	L921601-110	L922601-110	L923601-110
			5	C	2	7 x 0.3	B	L929615-110	L921615-110	L922615-110	L923615-110
			7.5	C	2	19 x 0.3	A	L929608-110	L921608-110	L922608-110	L923608-110
			7.8	C	2	19 x 0.3	B	L929603-110	L921603-110	L922603-110	L923603-110
		Silicone	5	C	2	7 x 0.3	B	L929606-110	L921606-110	L922606-110	L923606-110
		FEP	3.5	C	2	7 x 0.2	B	L929610-110	L921610-110	L922610-110	L923610-110
		GS(3)	4 x 6	C	2	19 x 0.3	C	L929609-110	L921609-110	L922609-110	L923609-110
B	1 TC	FEP	3.5	C	2	7 x 0.2	B	L929620-110	L921620-110	L922620-110	L923620-110
N	1 TC	PVC	4	X	1	3 x 0.3	B	L929901-110	L921901-110	L922901-110	L923901-110
		FEP	3.5	X	1	7 x 0.2	B	L929910-120	L921910-120	L922910-120	L923910-120
		GS(3)	4 x 6	X	1	14 x 0.3	C	L929919-120	L921919-120	L922919-120	L923919-120

(1) - X: extension cable - C: compensation cable. (2) - Class: tolerance class as per IEC 584. (3) - GS: glass silk

EXTENSION AND PROLONGATION FOR PT100 Ω

Wire or cable	Metal	No. wires	External sheath	External Ø	Ø wires	Conductor insulation	Internal braid	External braid	Code (by the metre)
Fil	Ag	1			0.5 mm	None			L063105-000
	Ni	1			0.5 mm	None			L063205-000
	Ag	1		1.1 mm	0.5 mm	Glass silk			L063404-000
Câble	Cu	2	Silicone	4.6 mm	16 x 0.2 mm	Silicone	None		L067824-000
		3	PVC	4.2 mm	7 x 0.2 mm	PVC	Tin-plated Cu		L067803-000
			PVC	3.7 mm	7 x 0.2 mm	PVC	None		L067810-000
			Silicone	4.6 mm	7 x 0.2 mm	PVC	None		L067805-000
			FEP	2.1 mm	7 x 0.06 mm	FEP	Silver-plated Cu		L067813-000
			Glass silk	3.5 mm	7 x 0.2 mm	Glass silk	None	Stainless steel	L067836-000
		4	PVC	5.0 mm	7 x 0.2 mm	PVC	Tin-plated Cu		L067804-000
			FEP	3.3 mm	7 x 0.2 mm	FEP	Silver-plated Cu		L067815-000

FASTENING COMPONENTS

CABLE GLANDS

Stainless steel cable gland

Body material	Ferrule material	For sheath Ø	Threading	Code
Stainless steel	Stainless steel	1.5mm	1/8" NPT	L078827-000
		2 mm	1/8" NPT	L078828-000
		3 mm	1/8" NPT	L078829-000
		3 mm	1/4" NPT	L078830-000
		3.2 mm	1/4" NPT	L078834-000
		4.5 mm	1/4" NPT	L078833-000
		4.5 mm	1/2" NPT	L078934-000
		6.0 mm	1/4" NPT	L078836-000
		6.0 mm	1/2" NPT	L078938-000
		6.0 mm	G1/2	L078946-000
		6.35 mm	1/4" NPT	L078835-000
		8.0 mm 8.0 mm	1/4" NPT 1/2" NPT	L078841-000 L078952-000
		8.0 mm	G1/2	L078937-000
		1.5 mm	1/8" NPT	L228123-000
		2.0 mm	1/8" NPT	L228124-000
		3.0 mm	1/4" NPT	L228125-000
		3.0 mm	1/2" NPT	L078940-000
	FEP	4.5 mm 5,0 mm	1/4" NPT 3/8 G tapered	L228126-000 L078849-000
		6.0 mm	1/4" NPT	L228127-000
		6.0 mm	3/8 G tapered	L078847-000
		6.0 mm	G1/2	L078838-000
		6.0 mm	1/2" NPT	L078939-000
		8.0 mm	1/4" NPT	L228128-000
Brass		1.5 mm	1/8" NPT	L228143-000
		3.0 mm	1/4" NPT	L228145-000
	FEP	3.2 mm 4.5 mm	G1/8 1/4" NPT	L078948-000 L228146-000
		6.0 mm	G1/4	L078845-000
		6.0 mm	1/4" NPT	L228147-000
		8.0 mm	G3/8	L078846-000
		1.5mm	1/8" NPT	L078927-000
	Brass	3.0 mm	1/4" NPT	L078930-000
		6.0 mm	1/4" NPT	L078936-000
		8.0 mm	1/4" NPT	L078941-000

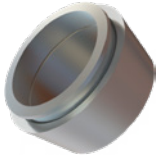

Stainless steel ferrules

SPARE FERRULES

Material	For sheath Ø	Code
Stainless steel	1.5 mm	L228173-000
	3 mm	L228175-000
	4.5 mm	L228176-000
	6 mm	L228177-000
Brass	3 mm	L228185-000
	6 mm	L228187-000
FEP	2 mm	L228194-000
	3 mm	L078857-000
	4.5mm	L078859-000
	6.0 mm	L078864-000
	8.0 mm	L078873-000

LEAK-TIGHT FITTINGS FOR WELDING - FOOD INDUSTRY

Body material	Ferrule material	For sheath Ø “d”	Length	Code
Stainless steel	Stainless steel	5.0 mm	54 mm	L228109-000
Stainless steel	Teflon	6.0 mm	54 mm	L228117-000

LEAK-TIGHT FITTINGS FOR WELDING - CEMENT

Body material	Ferrule material	For welding Ø "d" mm (inches)	Thread	Code
Steel	Steel	21,3 (1/2")	G1"	LU78978-000
Steel	Steel	21,3 (1/2")	G1"1/4	L079110-000
Steel	Steel	30 (-)		L078981-000
Steel	Steel	21,3 (1/2")	G1"1/2	LU78825-001
Steel	Steel	30,1 (-)		LU78866-001
Stainless steel	Stainless steel	21,3 (1/2")		L079112-000
Stainless steel	Stainless steel	21,3 (1/2")	1"NPT	L078984-000

EBA FLANGES

Description	Ø of protective tube	Material	Spacing	Code
Flange	15 mm	Cast iron	56 mm	L077310-000
Flange	21 mm		70 mm	L077311-000
Flange and companion flange	22 mm			L077312-000
Flange	27 mm			L077314-000
Flange and companion flange	27 mm			L077316-000
Flange	32 mm			L077319-000
Flange and companion flange	32 mm			L077320-000

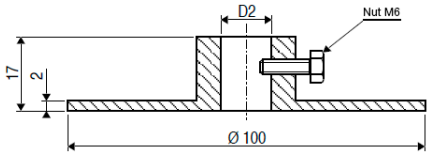

BRAKE DISCS

Tube diameter	D2	Code
21,3 mm	21,6	L077916-000
26,9 mm	27,2	LEL1711-000
32 mm	32,2	LM43049-001

TERMINAL STRIPS
ASSEMBLY-HEAD TRANSMITTERS

BB12 terminal strips

TERMINAL STRIPS

Type	Head type	Sensor type	No. of terminals	V/V: screwed/screwed V/S: screwed/welded	Code
BM04	MA	Pt 100 Ω / TC	4	V/V	L015007-000
BB02	DIN	Pt 100 Ω / TC	2	V/V	L015015-000
BA02	DIN A	TC	2	V/V	L015054-000
BB12	DIN	Pt 100 Ω / TC	2	V/S	L015055-000
BB13	DIN	Pt 100 Ω / TC	3	V/S	L015060-000
BB04	DIN	Pt 100 Ω / TC	4	V/V	L015062-000
BA04	DIN A	TC	4	V/V	L015065-000

Standard transmitters

TRANSMITTERS IN ASSEMBLY HEAD

Output signal	Protection mode	Input	Insulation	Code
4-20 mA	Standard	Universal: Pt 100 / all thermocouples	1.5Kv	LC5331A-321
		Pt 100	None	LC5333A-100
		All thermocouples	1.5Kv	LC5334A-100
	ATEX EEx"i"a	Universal: Pt 100 / all thermocouples	1.5Kv	LC5331B-221
		Pt 100	None	LC5333B-100
4-20 mA+ HART	Standard	Universal: Pt 100 / all thermocouples	1.5Kv	LC5335A-100
	ATEX EEx"i"a	Universal: Pt 100 / all thermocouples	1.5Kv	LC5335B-100
Programming kit				LC59050-000

Download free of charge the software for configuring your sensor head transmitters from www.pyrocontrole.com/en/support/download

HEAD - CABLE GLANDS

CONNECTING HEADS

Type	Material	Process connection	Cable feed	Ø cable (mm)	Protection	Terminal strip	ATEX certificate		Code
MA	Aluminium	M10	PE9	3.5 - 5.5	IP54	BM04	Without		L015001-000
DAN	Aluminium	G1/2	M20	4 - 12.5	IP54	BB			L015300-000
DAN-V	Epoxy-coated alu	G1/2	M20	4 - 12.5	IP65	BB			L015305-000
DAN	Aluminium	G1/2	1/2"NPT	4 - 12.5	IP54	BB			L015017-000
DIN B	Aluminium	G1/2	M20	6.5 - 8.5	IP54	BB			L015320-000
DIN A	Aluminium	G1/2	M20	6.5 - 8.5	IP54	BB			L015330-000
DIN A	Aluminium	G3/4	M20	6.5 - 8.5	IP54	BB			L015332-000
KNE	Aluminium	G1/2	M20	4.5 - 7.5	IP68	BB			L015042-000
KST	Inox	G1/2	M20	4.5 - 7.5	IP68	BB			L015035-000
LSX-D	Epoxy-coated alu	G1/2	M20	See cable glands M20	IP67	BB	With	Controlled sale (see ID50 system p. 192)	L015340-000
LSX-W	Epoxy-coated alu	G1/2	2xM20		IP67	BB	With		L015345-000
LSX-D	Stainless steel	G1/2	M20		IP67	BB	With		L015350-000
LSX-W	Stainless steel	G1/2	2xM20		IP67	BB	With		L015355-000

DAN

DIN A

DIN B

LSX-W

LSX-D

MA

Nickel-plated brass cable gland

CABLE GLANDS

Type	Material	Nb of cable feed	Fastening	Reinforced cable	Internal cable Ø (mm)	Internal cable Ø (reinforced cable) (mm)	ATEX certicate	Code
PE9	Nickael-plated brass	1	Yes	No	5 - 9.5	-	Without	L017211-000
1/2" NPT	Nickael-plated brass	1	No	No	4 - 8	-	Without	L017128-000
1/2" NPT	Nickael-plated brass	1	Yes	No	4 - 8	-	Without	L017225-000
1/2" NPT	Nickael-plated brass	1	Yes	No	7 - 12	-	ATEX "d"	L017395-000
3/4" NPT	Nickael-plated brass	1	Yes	Yes	10 - 16	7 - 12	ATEX "d"	L017350-000
3/4" NPT	Nickael-plated brass	1	Yes	No	7 - 12	-	ATEX "d"	L017396-000
M20	Polyamide	1	No	No	7 - 12	-	Without	L017640-000
M20	Nickael-plated brass	2	No	No	4 - 6	-	Without	L017669-000
M20	Nickael-plated brass	1	Yes	No	7 - 12	-	ATEX "d"	L017690-000
M20	Nickael-plated brass	1	Yes	Yes	7 - 12	4.5 - 8	ATEX "d"	L017668-000
M20	Polyamide	1	No	No	6 - 12	-	ATEX "ia"	L017235-000

CONTACT THERMOMETERS THERMOCOUPLES

C.A 1821 - C.A 1822

Ref. : P01654821 P01654822

STRENGTHS

- J, K, T, N, E, R or S thermocouples
- Recording of up to 1 million points
- Magnetized product compatible with MultiFix
- USB and Bluetooth communication
- Backlit digital display

SPECIFICATION

	C.A 1821	C.A 1822
Sensor	J, K, T, N, E, R or S thermocouple	
No. of inputs	1	2
Range	J: -210 to +1200 °C / -346 to +2192 °F K: -200 to +1372 °C / -328 to +2501 °F T: -250 to +400 °C / -418 to +752 °F N: -200 to +1300 °C / -328 to +2372 °F E: -150 to +950 °C / -238 to +1742 °F R: 0 to +1767 °C / 32 to +3212 °F S: 0 to +1767 °C / 32 to +3212 °F	
Resolution	Display in °C: θ < 1000 °C: 0.1°C and θ ≥ 1000 °C: 1°C Display in °F: θ < 1000 °F: 0.1°F and θ ≥ 1000 °F: 1°F	
Accuracy	(J, K, T, N, E) θ ≤ -100 °C ± (0.2 % R* +0.6 °C) - 100 °C < θ ≤ +100 °C ± (0.15 % R+0.6 °C) + 100 °C < θ ± (0.1 % R + 0.6 °C) (R, S) θ ≤ +100°C ± (0.15 % R +1.0 °C) +100°C < θ ± (0.1 % R +1.0 °C)	
Functions	Min., Max., HOLD, Alarms, Temperature Differential (C.A 1822)	
Recording	Manual start and stop on the product Programmed recording	
Alarms	Visual alert on threshold overrun settable via Data Logger Transfer Possibility of triggering recording on alarm threshold	
Data storage	More than 1 million points	
Power supply	- Alkaline batteries: 3 x 1.5V LR6 or rechargeable NiMH battery - Mains connection via mains adapter / micro USB (option)	
Battery life	1,000 hrs (portable mode) / 3 years of recording (one measurement every 15 minutes)	
Dimensions/ weight	150 x 72 x 32 mm / 260 g with batteries	
Protection	IP54 casing	
Operating temperature/ humidity	-10 to +60 ° C - 10 to 90 % RH	
Standards	IEC 61010-1 - IEC 61326-1	

ADDITIONAL INFO

- Shockproof protective sheath available as an accessory
- Compatible with the Data Logger Transfer module of the Dataview® software for:
  - data display
  - programming of recordings
  - automatic report export

CONTENTS

C.A 1821 and C.A 1822 delivered with:

- 1 carrying bag
- 3 x 1.5V LR6 batteries
- 1 USB cable
- 1 measurement report

CONTACT THERMOMETERS TEMPERATURE SENSORS

C.A 1823

Ref. : P01654823

STRENGTHS

- Pt100 and Pt1000 resistive sensors
- Recording of up to 1 million points
- Magnetized product compatible with MultiFix
- USB and Bluetooth communication
- Backlit digital display

SPECIFICATIONS

	C.A 1823
Sensor	Pt100 or Pt1000 sensor
No. of inputs	1
Range	-100 to +400 °C -148 to +752 °F
Resolution	Display in °C: 0.1°C Display in °F: 0.1°F
Accuracy	± (0.4 % R +0.3 °C)
Functions	Min., Max., HOLD, Alarms
Recording	Manual start and stop on the product Programmed recording
Alarms	Visual alert on threshold overrun settable via Data Logger Transfer Possibility of triggering recording on alarm threshold
Data storage	More than 1 million points
Power supply	- Alkaline batteries: 3 x 1.5V LR6 or rechargeable NiMH battery - Mains connection via mains adapter / micro USB (option)
Battery life	800 hrs (portable mode) / 3 years for recording (one measurement every 15 minutes)
Dimensions / weight	150 x 72 x 32 mm / 260 g with batteries
Ingress protection	IP54 casing
Operating temperature / humidity	-10 to +60 ° C - 10 to 90 % RH
Standards	IEC 61010-1 for 50 V voltages in category II - IEC 61326-1

ADDITIONAL INFO

- Protective shockproof sheath available as an accessory
- Compatible with the Data Logger Transfer module of the Dataview® software for:
  - data display
  - programming of recordings
  - automatic report export

CONTENTS

C.A 1823 delivered with:

- 1 carrying bag
- 3 x 1.5V LR6 batteries
- 1 USB cable
- 1 measurement report

CHAUVIN ARNOUX
Immeuble Front Office
12 - 16 rue Sarah Bernhardt
92600 Asnières-sur-Seine
Tel. : +33 1 44 85 44 85
Fax : +33 1 46 27 07 48
info@chauvin-arnoux.fr
www.chauvin-arnoux.com

CHAUVIN ARNOUX METRIX
Immeuble Front Office
12 - 16 rue Sarah Bernhardt
92600 Asnières-sur-Seine
Tel. : +33 1 44 85 44 85
Fax : +33 1 46 27 07 48
info@chauvin-arnoux.fr
www.chauvin-arnoux.com

CHAUVIN ARNOUX ENERGY
16, rue Georges Besse
92182 Antony Cedex - France
Tel. : +33 1 75 60 10 30
Fax : +33 1 46 66 62 54
info@enerdis.fr
www.chauvin-arnoux-energy.com

MANUMESURE
9, allée Jean Prouvé
92110 Clichy - France
Tel. : +33 1 75 61 01 80
Fax : +33 1 47 33 28 02
info@manumesure.fr
www.manumesure.fr

YOUR CONTACTS

FRANCE
SOUTH-WEST SECTOR
Telephone: +33 (0)4 72 14 16 31
sud.est@pyrocontrole.fr

WEST SECTOR
Telephone: +33 (0)4 81 76 02 55
ouest@pyrocontrole.fr

ILE-DE-FRANCE/NORTH-EAST SECTOR
Telephone: +33 (0)4 81 76 02 54
idf.nord.est@pyrocontrole.fr

INTERNATIONAL
PYROCONTROLE EXPORT DEPARTMENT
Telephone: +33 (0)4 72 14 15 40
export@pyrocontrole.com

10 SUBSIDIARIES WORLDWIDE

GERMANY
CHAUVIN ARNOUX GMBH
Ohmstraße 1
77694 KEHL / RHEIN
Tel.: +49 7851 99 26-0
Fax: +49 7851 99 26-60
info@chauvin-arnoux.de
www.chauvin-arnoux.de

AUTRICHE
CHAUVIN ARNOUX GES.M.B.H
Gastgegasse 27
1230 WIEN
Tél. : +43 1 61 61 9 61
Fax : +43 1 61 61 9 61-61
vie-office@chauvin-arnoux.at
www.chauvin-arnoux.at

CHINA
SHANGHAI PU-JIANG ENERDIS INSTRUMENTS CO. LTD
3 Floor, 23 Building
Gemdale Viseen Minhang Technology
& Industrial Park Project
1288 lane, Zhongchun Road Minhang
District, SHANGHAI City.
Tél. : +86 21 65 21 51 96
Fax : +86 21 65 21 61 07
info@chauvin-arnoux.com.cn

SPAIN
CHAUVIN ARNOUX IBÉRICA SA
C/ Roger de Flor N°293
1a Planta
08025 BARCELONA
Tel. : +34 902 20 22 26
Fax : +34 934 59 14 43
info@chauvin-arnoux.es
www.chauvin-arnoux.es

ITALY
AMRA SPA
Via Sant'Ambrogio, 23
20846 MACHERIO (MB)
Tel. : +39 039 245 75 45
Fax : +39 039 481 561
info@amra-chauvin-arnoux.it
www.chauvin-arnoux.it

MIDDLE EAST
CHAUVIN ARNOUX MIDDLE EAST
PO Box 60-154
1241 2020 JAL EL DIB
(Beirut) - LEBANON
Tel. : +961 1 890 425
Fax : +961 1 890 424
camie@chauvin-arnoux.com
www.chauvin-arnoux.com

UNITED KINGDOM
CHAUVIN ARNOUX LTD
Unit 1 Nelson Ct, Flagship Sq
Shaw Cross Business Pk, Dewsbury
West Yorkshire - WF12 7TH
Tel. : +44 1924 460 494
Fax : +44 1924 455 328
info@chauvin-arnoux.co.uk
www.chauvin-arnoux.com

SCANDINAVIA
CA MÄTSYSTEM AB
Sjöflygvägen 35
SE-183 62 TABY
Tel. : +46 8 50 52 68 00
Fax : +46 8 50 52 68 10
info@camatsystem.com
www.camatsystem.com

SWITZERLAND
CHAUVIN ARNOUX AG
Moosacherstrasse 15
8804 AU / ZH
Tel. : +41 44 727 75 55
Fax : +41 44 727 75 56
info@chauvin-arnoux.ch
www.chauvin-arnoux.ch

USA
CHAUVIN ARNOUX INC
d.b.a AEMC Instruments
15 Faraday Drive
Dover - NH 03820
Tel. : +1 (800) 945-2362
Fax : +1 (603) 742-2346
sales@aemc.com
www.aemc.com

906 131 137 - Ed.1 - 2020 - Non-contractual document - Please confirm specifications when ordering - Photos and illustrations non-contractual.

poissons.agency

FRANCE
PYROCONTROLE
6 bis, av du Docteur Schweitzer
69881 Meyzieu Cedex - France
Tel. : +33 4 72 14 15 40
Fax : +33 4 72 14 15 41
info@pyrocontrole.com
www.pyrocontrole.com

MIDDLE EAST
Chauvin Arnoux Middle East
P.O. BOX 60-154
1241 2020 JAL EL DIB -
LEBANON
Tel: +961 1 890 425
Fax: +961 1 890 424
camie@chauvin-arnoux.com
www.chauvin-arnoux.com

UNITED KINGDOM
Chauvin Arnoux Ltd
Unit 1 Nelson Ct, Flagship Sq,
Shaw Cross Business Pk
Dewsbury, West Yorkshire -
WF12 7TH
Tel: +44 1924 460 494
Fax: +44 1924 455 328
info@chauvin-arnoux.co.uk
www.chauvin-arnoux.com

CHAUVIN ARNOUX